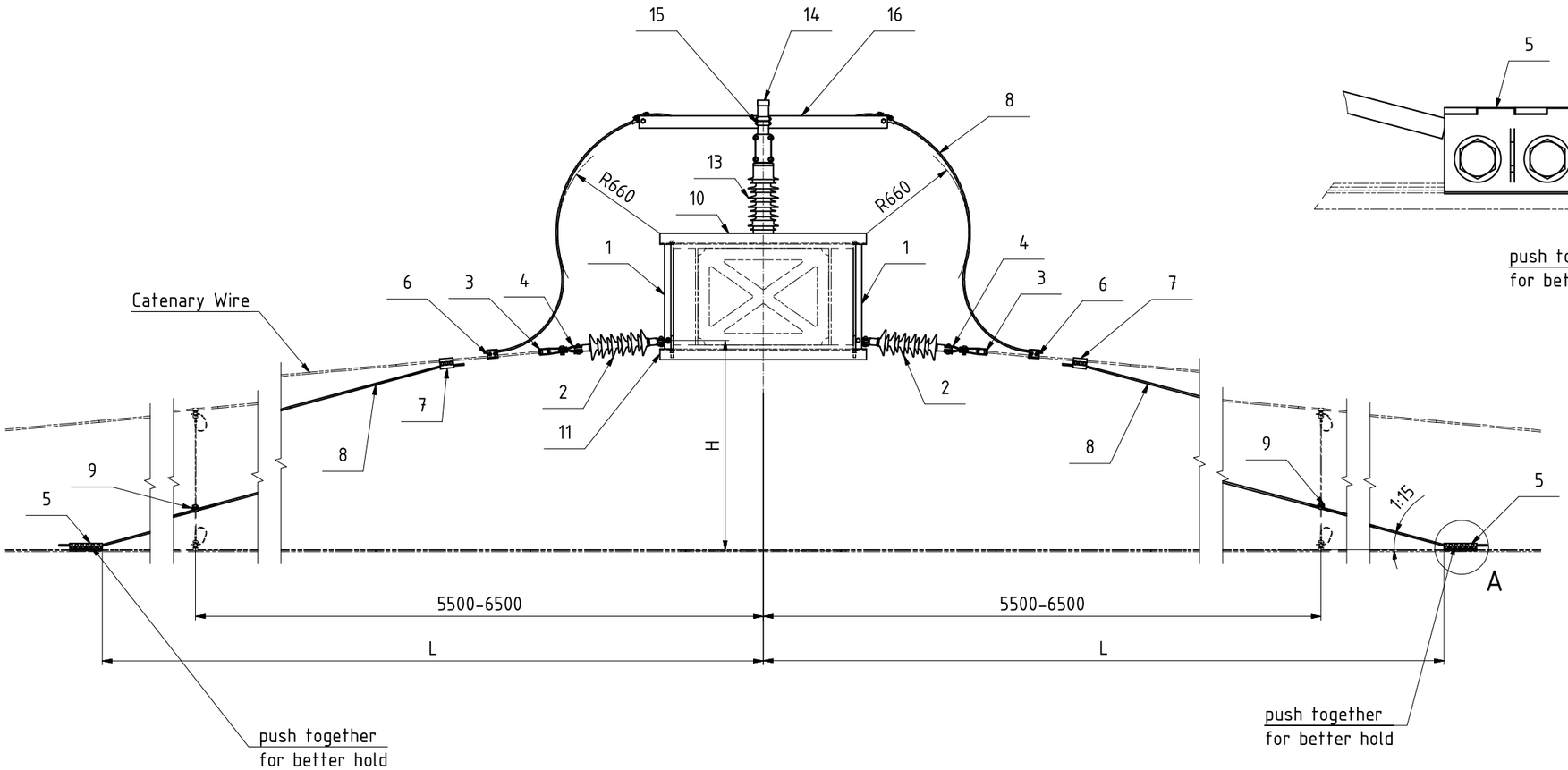

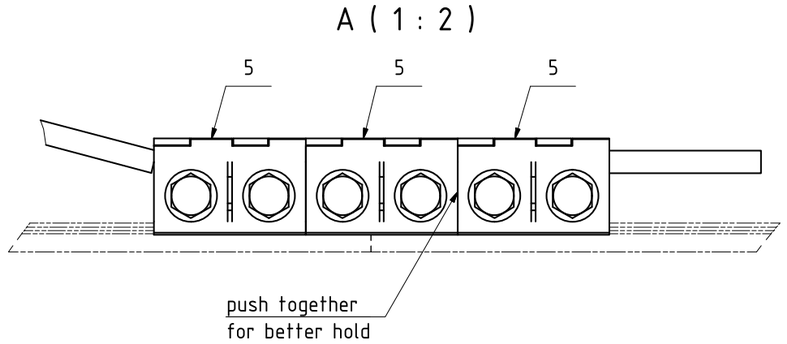

* 2 - 6 pcs., depending on system height and mast distance
** from wire drum, approx. 2x L + 10m

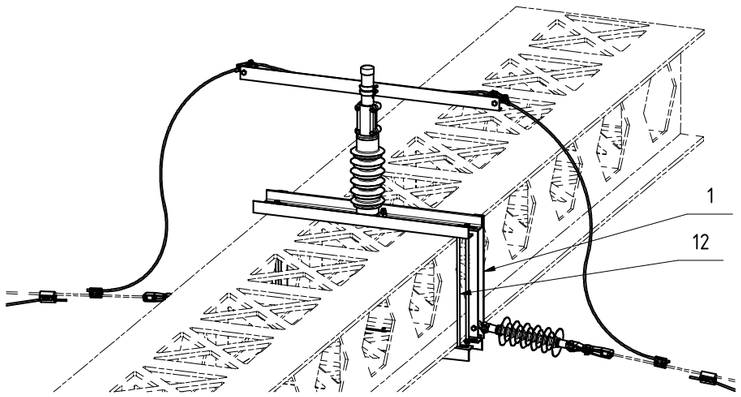

Z-Dropper settings
for a rise of 1 in 15

H	L
0.50	7.50
0.60	9.00
0.70	10.50
0.80	12.00
0.90	13.50
1.00	15.00
1.10	16.50
1.20	18.00
1.30	19.50
1.40	21.00
1.50	22.50
1.60	24.00
1.70	25.50
1.80	27.00

All dimensions in m

Qty.	Description	Pos.	Drawing / Norm	Art-No.	PADS
2	Threaded Bar M16 Assembly	17	396.00033		0111/191682
1	Support Bracket Assembly	16	567.00170		0091/045282
2	U Bolt M12 Assembly	15	398.00025-1		0111/193605
1	Cantilever Tube	14	371.00144-2 Typ 04		0091/045471
1	Strut Insulator Strong, 25 kV	13	424.00164	5153.1	0091/070081
4	Long Shank Bolt M16 Assembly	12	396.00009 Typ 74	3251.74	0091/046394
2	70 x 70 x 7 Angle	11	567.00166-2 Typ 110		0111/190589
1	Adaptor Frame Assembly	10	567.00166-1 Typ 110		0111/190578
*	Crossing Clamp Assembly	9	437.00049		0091/070286
**	Bronze rope Bz II 70mm²	8	453.00004 Typ 020		0091/012330
2	Universal clamp	7	456.00008	3422.240	0091/045820
2	Universal clamp	6	456.00004	3422.150	0091/045819
6	Bridging Clamp	5	437.00043		0091/070271
2	Clevis and Tongue Assembly	4	417.00037-1		0091/045116
2	Dead end clevis (S 70) type, stainless	3	417.00097		0091/012744
2	Long-Rod Insulator 25 kV	2	424.00149	5119.25	0091/045127
2	Termination Bracket Assembly	1	523.00067-29		0111/190571

REV	DESCRIPTION OF CHANGE	DRAWN	CHCKD	APPD	DATE
D	Part list: PADS no. for 398.00025-1 corrected.	BEI	PKR	PKR	17.01.2019
C	new with U-Bolt 398.00025-1 (old 398.00025)	HRS	BEI	BEI	20.11.2018
B	new Pos.9, 437.00049, (old:437.00022)	RH	Ca	Ca	27.08.2015

PROJECT TITLE: NR SERIES 1 OLE SYSTEM AND BASIC DESIGN DEVELOPMENT

MATERIAL: see components
SURFACE TREATMENT: see components
WEIGHT kg: N/A

NETWORK RAIL ACCEPTANCE | NAME | DATE

	NAME	SIGNATURE	DATE
DESIGN			
DRAWN	Ho		09.10.2014
CHCKD	Ca		22.04.2015
APPD	Wg		22.04.2015

Furrer+Frey®
Overhead contact lines
Overhead contact line engineering
Thunstrasse 35
CH-3000 Bern 6
Phone +41 31 357 61 11
Fax +41 31 357 61 00
www.furrerfrey.ch

Network Rail
Infrastructure Projects
(Electrification and Plant Design Group)
Suite 2, Floor 3
Waterloo General Offices
Waterloo Station
London SE1 8SW

CAD GENERATED-FILE
SAVED AS:
B.05.03.02.000D.iam

SCALE 1:25

Mid point anchor

for Encumbrance 0.50 to 1.80

on Mono Anchor Boom WEB 450

GRIP stage

A2 | SHEET 1 OF 1

ART.-No.

DRAWING No.
B.05.03.02 D

All rights are reserved with respect to this document and its content.
It is prohibited to duplicate the document in whole or in part,
and its contents may not be communicated to or used by any third party,
without our prior written consent. © Furrer+Frey AG